RADIANT
ARCHITECTURAL LIGHTING

# Stretta Projector System RGBW IP66

Exterior, DMX controlled, dynamic, 2 degree x 35 degree ultra-narrow beam, RGBW LED lighting system

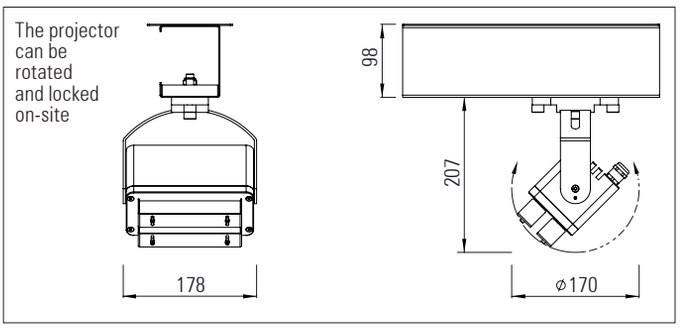


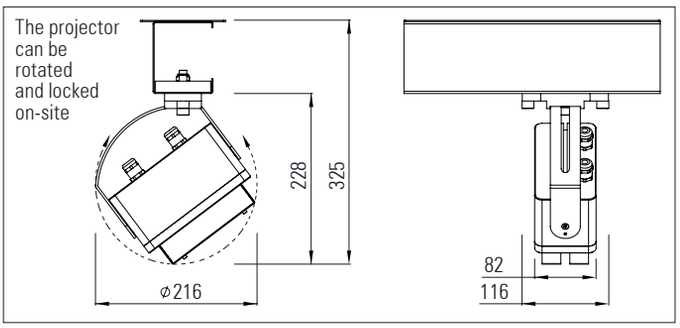


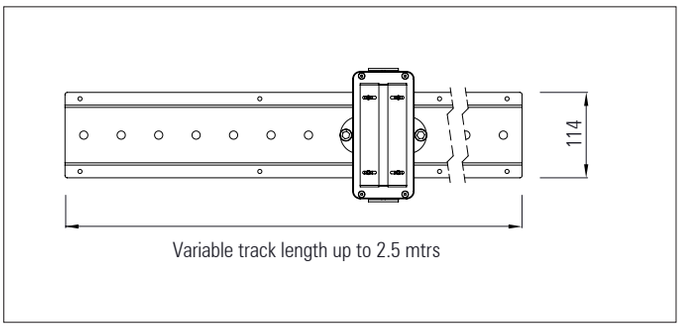


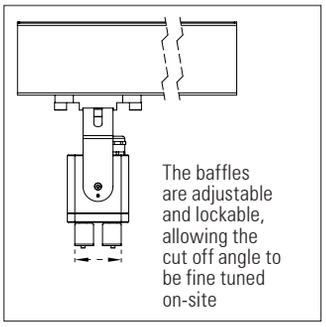


Up to 500 Lumens per projector with RGBW Luxeon Z light engine

**Stretta Projector System RGBW IP66**

Exterior, DMX controlled, dynamic, 2 degree ultra-narrow beam, RGBW LED lighting system

**Product description:**

Each projector incorporates a 32 x RGBW LED light engine, linear optic - producing an ultra narrow 2 degree x 35 degree elliptical beam.

The projectors are individually addressable via DMX, allowing for dynamic, customisable lighting effects to be achieved.

Each projector can be run at up to 50 Watts and produces up to 500 Lumens with all RGBW Luxeon Z LEDs on full power.

The projectors can be mounted onto a track or surface mount base. The length of the track can be specified to suit project requirements. The projectors are rotatable in two axes using the adjustable angle brackets. Other mounting brackets are also available including custom designs to meet project requirements.

Two adjustable baffles allow the cut off angle to be fine tuned on-site.

Various LED colours, colour temperatures and CRI options available. Different colour LEDs or white LEDs of different colour temperatures can be specified for each of the 32x LEDs within the light engine.

Satin black, satin white or any RAL paint colour finish.

| Product Code | IP | LED Type | LED Colour or white LED Colour Temp.(K) | | CRI | Optics | Mounting type | Finish |
|---|---|---|---|---|---|---|---|---|
| STRETTA SYSTEM IP66 | 66 | Lumileds:<br><br>LUXEON Z<br><br>32 x LED RGBW array | Far Red, Deep Red, Red, Red-Orange, Amber, PC Amber, Mint, Lime, Green, Cyan, Blue, Royal Blue, Violet | 22=2,200k<br>27=2,700k<br>30=3,000k<br>35=3,500k<br>40=4,000k<br>50=5,000k<br>57=5,700k<br>65=6,500k | 70<br>80<br>90 | 2° x 35 ultra narrow elliptical beam | Track (specify track length)<br><br>Adjustable angle surface mount base<br><br>Fixed angle surface mount base<br><br>Custom solution | Black<br><br>White<br><br>Any RAL colour |

Radiant Architectural Lighting
10 Broadbent Close
20 - 22 Highgate High Street
London N6 5JW
ENGLAND UK

T: + 44 ( 0 ) 20 8348 9003
F: + 44 ( 0 ) 20 8348 6478
E: david@radiantlights.co.uk
www.radiantlights.co.uk

EN 60598 CE
The information in this document is provided without liability and subject to change without notice

REV 2

Products and literature designed by
DAVID MORGAN ASSOCIATES